Circuits Lab – Week 7

This lab has two parts. In Part 1 you will use a circuit simulator to explore how resistors and capacitors behave in circuits. In Part 2 you will build your first real circuits on a breadboard using the Raspberry Pi as a power supply. Record all measurements and observations as you go.

Part 1: Simulated Circuits

1. Resistors in series

a. Build a circuit with a 10V voltage source and two resistors in series

b. Define nodes on either side of the voltage source and in between the resistors

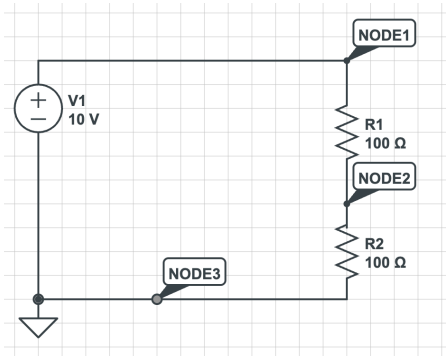

c. Examine the voltage values at each node and the current for the system

Voltage in Node 1 = 10V; Voltage in Node 2 = 5V; Voltage in Node 3 = 0V

d. Add a third resistor and an additional node and make note of how this changes the voltage at each node and the current in the system.

After adding the third resistor, the decrease rate in voltage lowers. It is because the 10V voltage needs to be equally distributed to all three resistors.

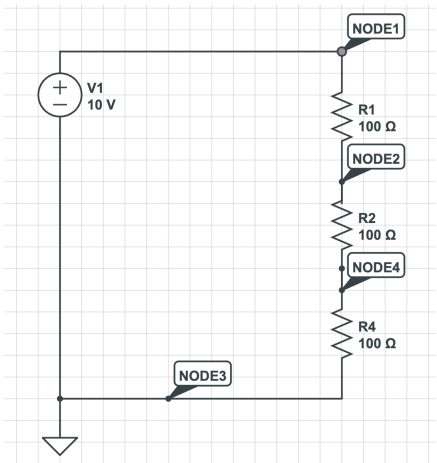

2. Resistors in parallel

a. Build a circuit with a 10V voltage source and two resistors in parallel

b. Define nodes on either side of the voltage source and each resistor

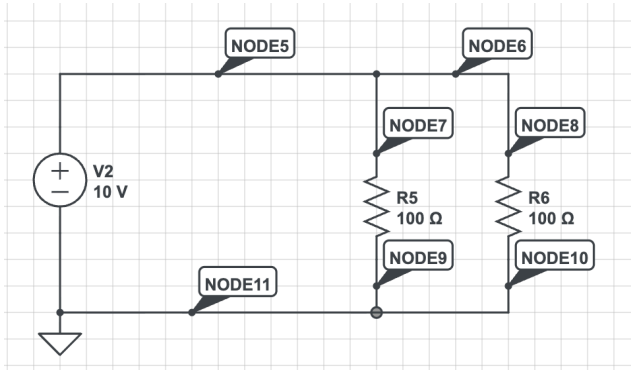

c. Examine the voltage values at each node and the current across the voltage source and each resistor

Voltage in Node 5 = 10V; Voltage in Node 6 = 10V; Voltage in Node 7 = 10V; Voltage in Node 8 = 10V; Voltage in Node 9 = 0V; Voltage in Node 10 = 0V; Voltage in Node 11 = 0V

Current at R5 = 100mA; Current at R6 = 100mA

d. Add a third resistor in parallel and additional nodes. Make note of how this changes the voltage at each node and the current across each resistor.

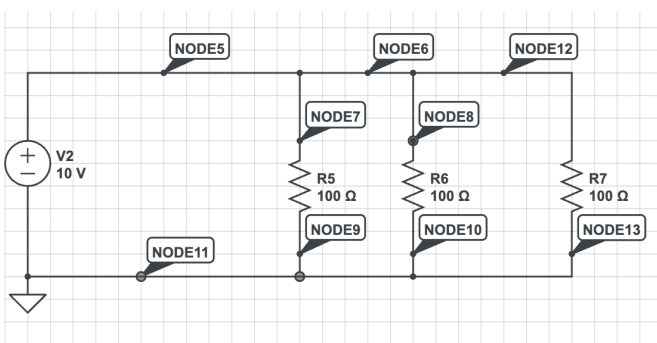

Voltage in Node 12 = 10V; Voltage in Node 13 = 0V

Current at R5 = 100mA; Current at R6 = 100mA; Current at R7 = 100mA

→ current across each resistor is still the same, and all nodes are unchanged. Node 12 is also 10V going into the resistor and 0V coming out of the resistor.

3. Resistors in series and parallel

a. Build a circuit with a 10V voltage source with two resistors in parallel and a third resistor in series – the third resistor is in series with each parallel resistor in a single loop.

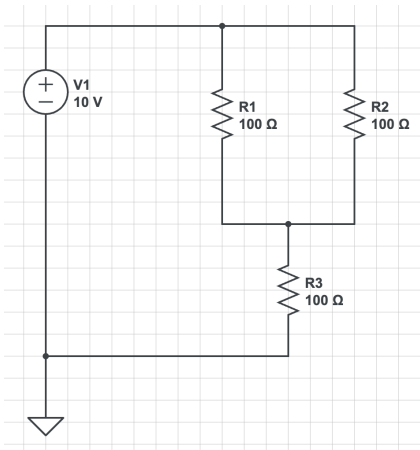

b. Define nodes on either side of the voltage source and across each of the resistors

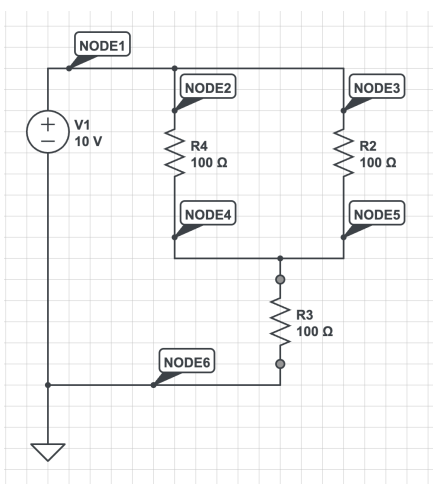

c. Examine the voltage value at each node and the current across the voltage source and each resistor. Make note of how this compares to either the case of resistors only in parallel or only in series.

Voltage in Node1 = 10V; Voltage in Node2 = 10V, Voltage in Node3 = 10V, Voltage in Node4 = 6.667V, Voltage in Node5 = 6.667V, Voltage in Node6 = 6.667V

Current at R4 = 33.33mA; Current at R2 = 33.33mA; Current at R3 = 66.67mA, Current at Voltage Source = -66.67mA

First: current splits through R4 and R2 in parallel. Then: currents recombine and go through R3 in series to ground. So it behaves like parallel, *then* series

Compared to the pure series circuit: this circuit has a split path, total resistance is smaller (150 Ω vs 200 Ω), so it draws more current.
→ Node voltages won't be evenly split like 10 → 5 → 0; instead you get an intermediate node at 6.67 V

Compared to the pure parallel circuit: Here, the parallel resistors do NOT get the full 10V because R3 'lifts' the bottom of the parallel network up to 6.67V so each parallel resistor only sees 3.33 V, not 10V.
→ total resistance is larger (150Ω vs 50Ω), so current is smaller

4. RC circuit

An RC circuit combines a resistor and a capacitor. The capacitor stores energy (like a tiny rechargeable battery), and the resistor controls how quickly it charges and discharges. The "time constant" of the circuit, written as the Greek letter tau (τ), is just the resistance multiplied by the capacitance: $\tau = R \times C$. This tells you roughly how long it takes for the capacitor to charge up or drain.

a. Build a simple RC circuit with a step function voltage supply, a 100 Ohm resistor and 10uF capacitor. Add voltage in and out nodes on either side of the resistor.

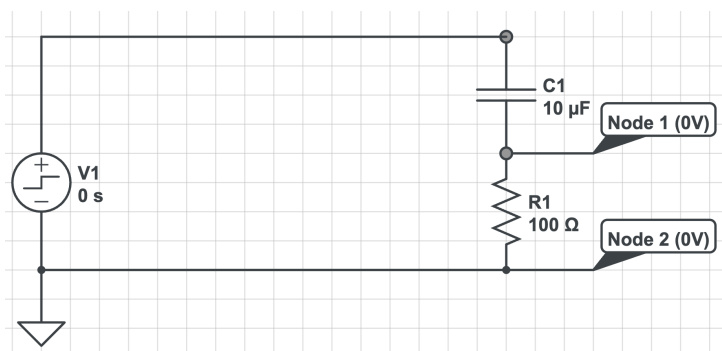

b. Use the time domain simulator to examine how the voltage and current change over time.

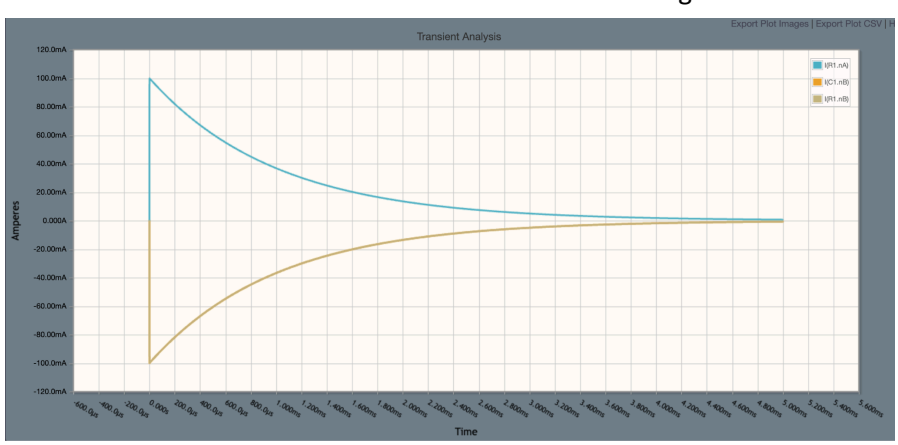

c. Explore how the time dependence of the system changes as you vary the resistance and capacitance in the system.

Combination 1: Smaller Resistance (10 Ohms)

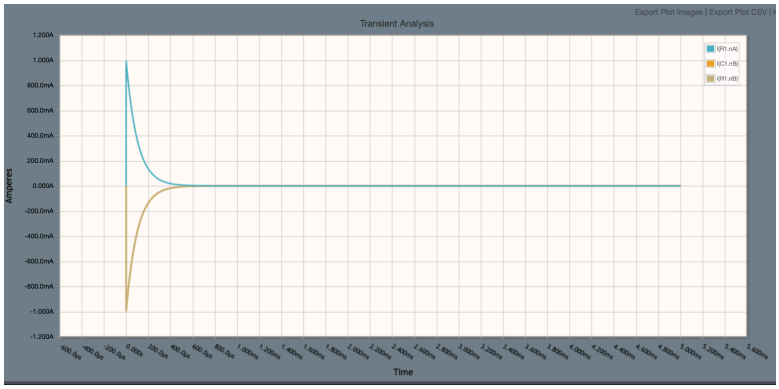

Combination 2: HIgher Resistance (500 Ohms)

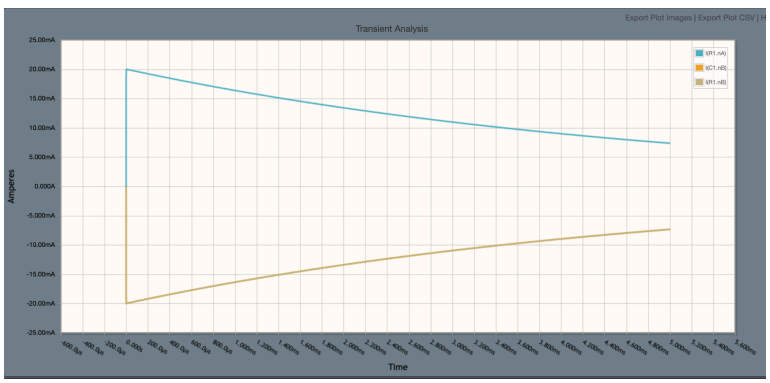

Combination 3: Smaller Capacitance (1uF)

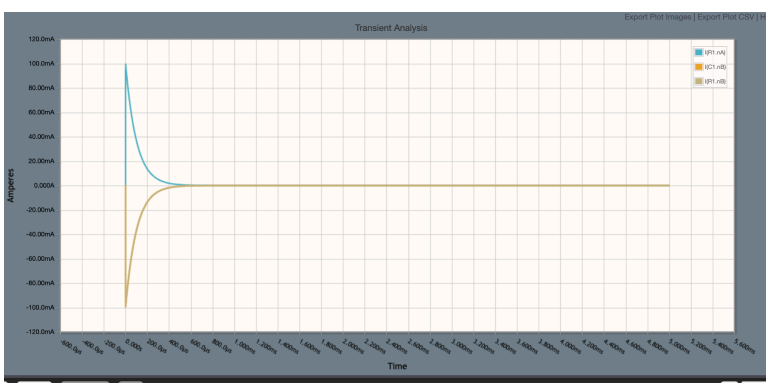

Combination 4: Higher Capacitance (50uF)

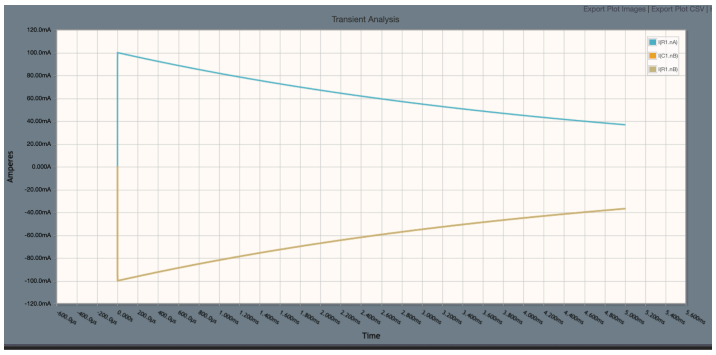

d. Calculate the time constant (τ = R × C) for each combination you try. Does the simulator match your calculation?

Time Constant of Given Combination = 100 Ohms x 10uF = 1ms

Time Constant of Combination 1 = 10 Ohms x 10uF = 0.1ms

Time Constant of Combination 2 = 500 Ohms x 10uF = 5ms

Time Constant of Combination 3 = 100 Ohms x 1uF = 0.1ms

Time Constant of Combination 4 = 100 Ohms x 50uF = 5ms

5. RC filter (low-pass filter)

An RC circuit can also be used as a filter. When you feed a changing signal into an RC circuit, it lets slow changes through but smooths out fast changes. This is called a "low-pass filter" because it passes low frequencies and blocks high ones. The frequency where it starts to block is called the "cutoff frequency" and is determined by the same time constant from the previous activity. This is an important concept – you will need this idea in a few weeks when we power a radiation detector and need to filter out noise from the power supply.

a. Build a circuit with an oscillating square wave voltage supply, initially with a 100 Hz frequency. Include a 1kΩ resistor and a 1uF capacitor. Add nodes to examine the input and output voltage.

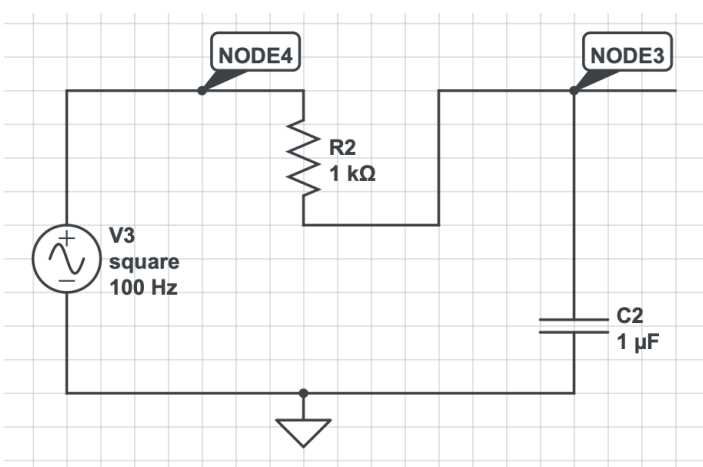

Node 4: 10v

Node 3: 10v

b. Use the time domain simulator to examine how changes to the resistance (and/or capacitance) affect the output voltage. Try different input voltage frequencies.

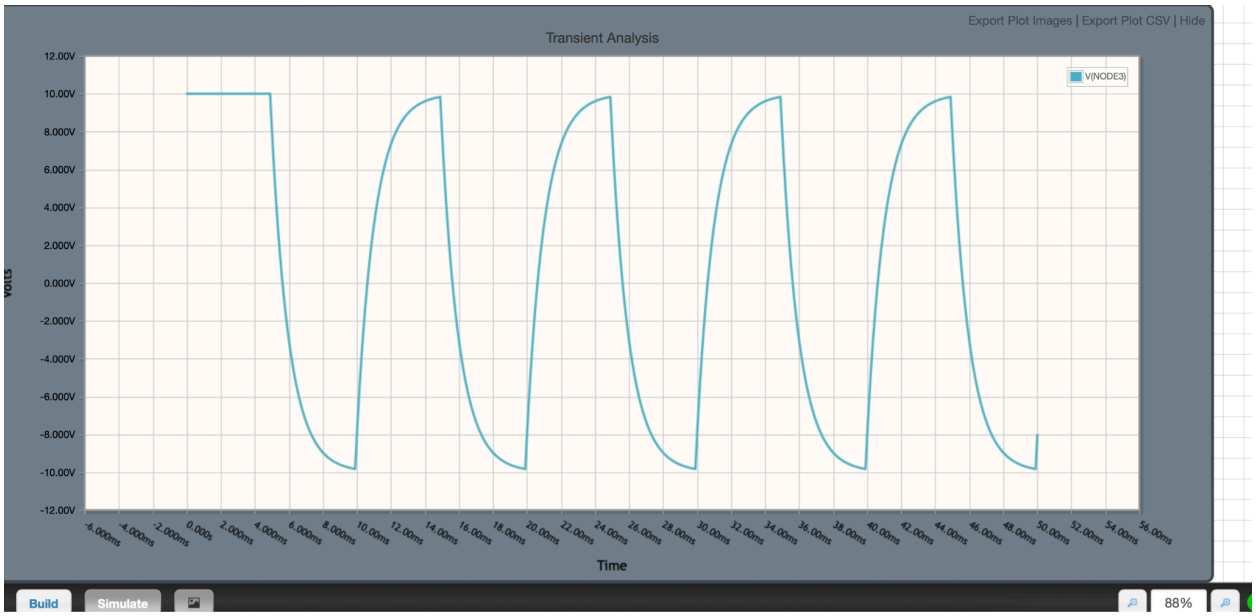

Above is the graph for 10v

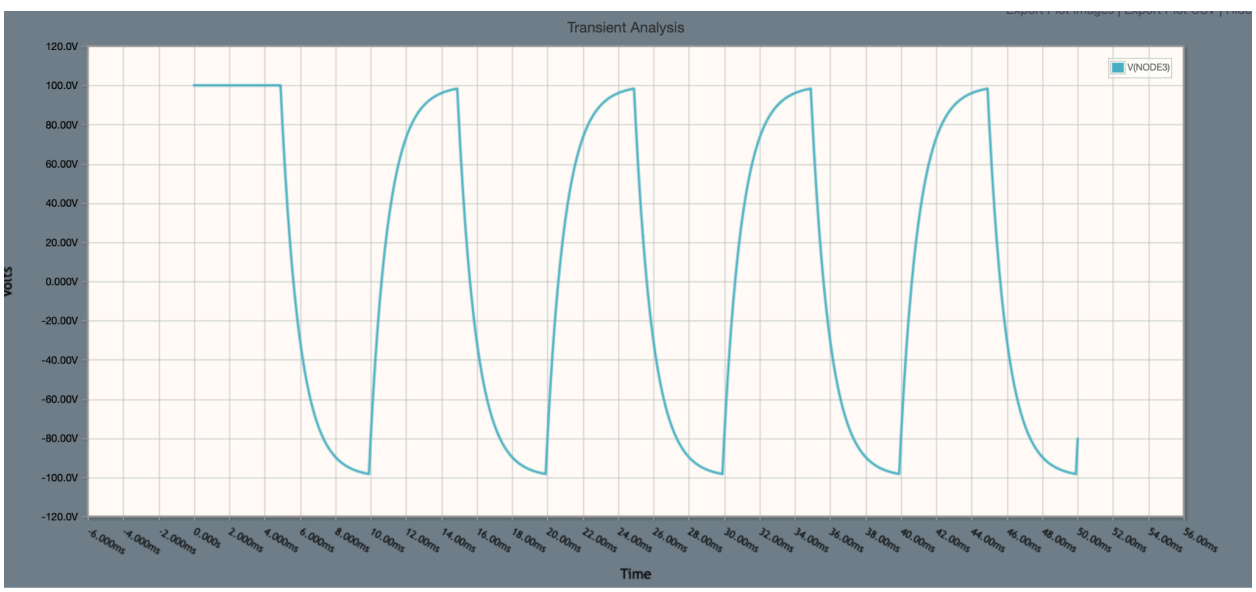

Above is the graph for 100v. As you can see, by increasing the input voltage we increase the scale of the graph, but not the shape

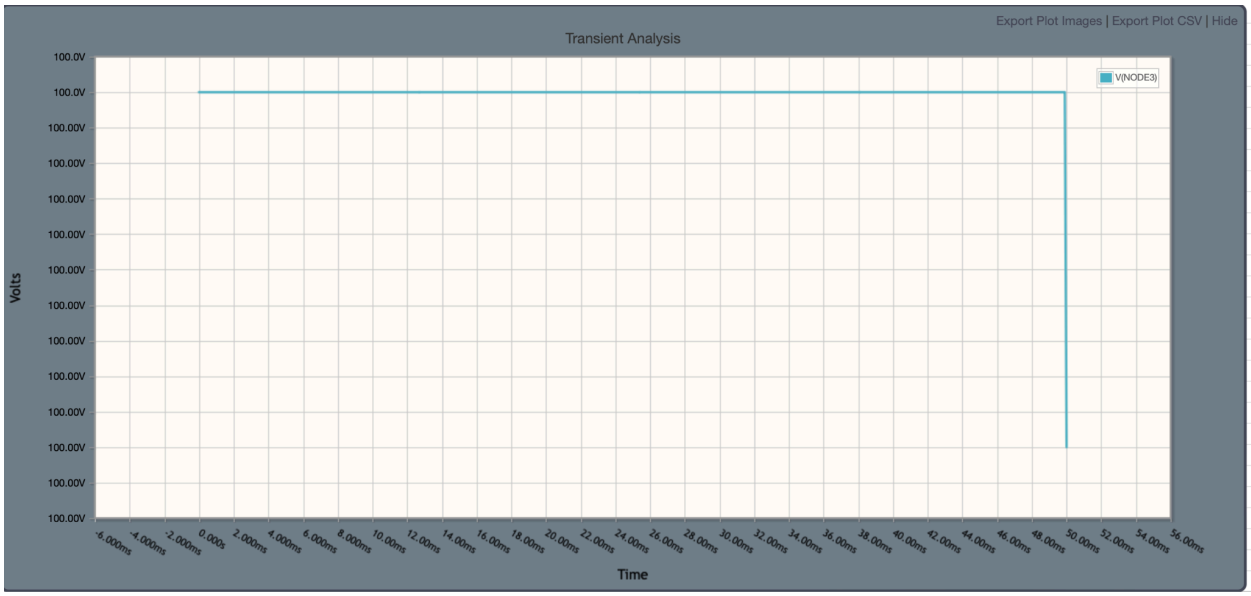

Above is the graph if we change the capacitance to 100 uF.

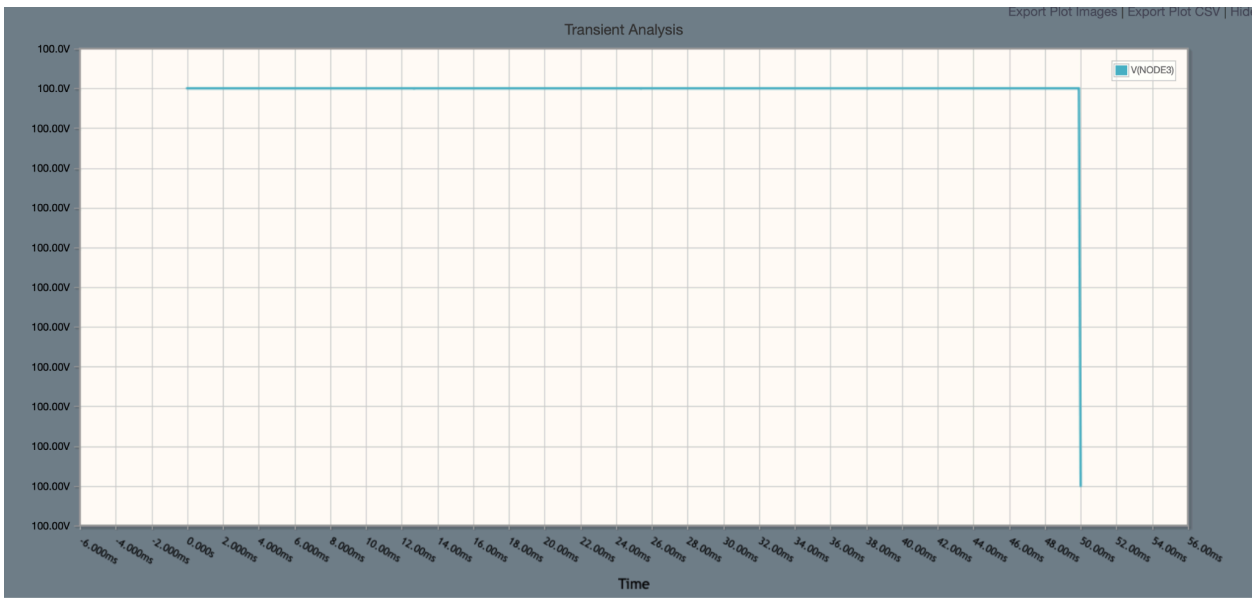

Above is the graph if we change the capacitance to 0.1uF.

c. What happens to the output when you increase the frequency of the input signal? What happens when you decrease it?

When we increase the frequency, the amplitude decreases, as the capacitor has less time to change. When we decrease the frequency, the amplitude will increase.

d. At what point does the output start to look very different from the input? How does this relate to the time constant of your circuit?

The output starts to look different when the period becomes comparable to tau, as the capacitor can't charge or uncharge rapidly enough to follow the square shape.

Part 2: Building Real Circuits

Now you will build real circuits on a breadboard using your Raspberry Pi (RPi) as a voltage source. This will get you familiar with the breadboard and basic tools you will use in the coming weeks.

6. Setting up your breadboard

a. Turn on the Raspberry Pi (RPi)

   Done

b. The breadboard has two long columns on each side marked + and –. These are the power rails. The rows in the middle of the board are where you will place components. Each row of five holes is connected internally, so anything plugged into the same row is electrically connected.

   Done

c. Connect one of the 5V pins on the RPi to the + column on the breadboard

   Done

d. Connect one of the ground pins on the RPi to the – column on the breadboard

   Done

e. Run a connector from the + column to one row on the main part of the breadboard

   Done

f. Run a connector from the – column to a different (but close) row on the main part of the breadboard

   Done

g. If we connected a 1Ω resistor (don't try it!) between these two rows – so that it is in a closed loop with the 5V supply from the RPi, how much current would this circuit attempt to draw across the resistor? 5A current

h. The RPi adaptor provides 5V and up to 2 Amps, is this current sufficient?

   No, the potential 5A current will be higher than the 2A current that the RPi can handle.

i. What do you think might happen? Please don't actually do this.

   It may overheat the resistor and damage the RPi.

j. Connect a resistor of more than at least 500Ω between the two rows to make a complete circuit.

   Done

k. Why is a higher resistance safer? What might happen to the resistor if it draws too much current? With a higher resistance, it draws a much smaller current which can be safely handled by RPi. If the resistor draws too much current, it will overheat the resistor and brings a risk of damaging the RPi.

l. Use your multi-meter to measure the voltage drop across the resistor. Is it what you expected?

   NOTE: To measure voltage, connect the meter leads to the two sides of the component (in parallel with it). To measure current, you have to put the meter in series with the rest of the circuit – the current has to run through the meter. If your meter can measure current, try that as well. Voltage Drop = 5.02V

   It is what we expected because after the resistor, the circuit goes straight to ground, so the voltage needs to drop by the voltage that's being supplied which is 5V.

7. Building a real RC circuit

Now you are going to build a real version of the RC circuit you simulated in Part 1 and actually measure the time constant.

e. Remove the single resistor from your breadboard circuit and replace it with a 10kΩ resistor and a 100uF capacitor in series. The resistor should connect to the +5V side and the capacitor should connect between the resistor and ground. Make sure the capacitor is oriented correctly – electrolytic capacitors (the tall cylindrical ones) have a marked negative side that should connect toward ground.

   NOTE: The order of resistor and capacitor in the loop does not change the time constant, but placing the resistor first and measuring voltage across the capacitor makes it easier to see the charging and discharging behavior.

f. Calculate the time constant for this circuit. With a 10kΩ resistor and a 100uF capacitor, what should τ be? This should be a familiar unit of time.

   Time Constant = 10kΩ x 100uF = 1 second

g. Set your multi-meter to measure DC voltage and connect it across the capacitor (one lead on each side of the capacitor).

   C = 4.8V

h. Disconnect the wire going from the + rail to the resistor. The capacitor should be fully discharged – the voltage across it should read 0V (or close to it). If it does not, briefly touch a connecting wire across the resistor+capacitor circuit, with the + rail disconnected, to discharge it.

i. Now reconnect the wire from the + rail to the resistor and watch the voltage on the multi-meter. You should see the voltage rise from 0V toward 5V. Does it rise quickly at first and then slow down?

   Yes- it shot up to 4 and then slowly rose to 4.8

j. Once the capacitor is charged, disconnect the +5V wire from the resistor and instead connect that end of the resistor directly to the ground (–) rail. Watch the voltage reading. You should see it decay from ~5V back toward 0V.

   yes

k. Try to estimate how long it takes for the voltage to drop to about 37% of where it started (roughly 1.8V if it started at 5V). This time is one time constant. How does it compare to your calculation?

   It takes about 1 second!

   NOTE: 37% might seem like an odd number. It comes from the math behind the exponential decay – after exactly one time constant, the voltage has dropped to 1/e (about 37%) of its starting value. This is the same exponential behavior you saw in the simulation.

l. Try swapping in different resistor and capacitor values. For each combination, calculate the expected time constant first, then measure it. Try to pick values that give you time constants you can comfortably observe – too short and it will be hard to read the meter, too long and you will be waiting a while.

   Pair 1: 10kΩ resistor and a 220uF capacitor

   Expected Time Constant = 2.2 seconds

   Measured Time needed to drop 37% = around 2 seconds

Pair 2: 100kΩ resistor and a 100uF capacitor

Expected Time Constant = 10 seconds

Measured Time needed to drop 37% = around 11 seconds

m. How do your measurements compare to the values you calculated and to what you saw in the simulation? Are they exactly the same? If not, what might be causing any differences?

The measurements are mostly similar to our calculations. Errors are within 0.01 unit.